LiGHT SKY



LUNAR MAX

LAMP MOVING BEAM

FEATURES

- The LUNAR MAX is a pure beam moving head light featuring a high-precision optical system with a 200mm front lens, delivering long-throw projection, high illuminance, full-bodied beams, and sharp gobos.
- Equipped with a custom OSRAM co-developed lamp with a 4,000-hour expected lifetime.
- Multi-prism effects with 6-Linear, 8-facet, 24-facet, and 48-facet prisms, combinable in pairs to create versatile beam effects and strong three-dimensional visuals.
- Produces a total output of 14,000 lumens with a CRI up to 80, ensuring vivid colors and excellent saturation.
- Compact and lightweight design with fast pan/tilt movement and precise positioning.
- Ideally suited for stage shows, theaters, and outdoor architectural lighting.

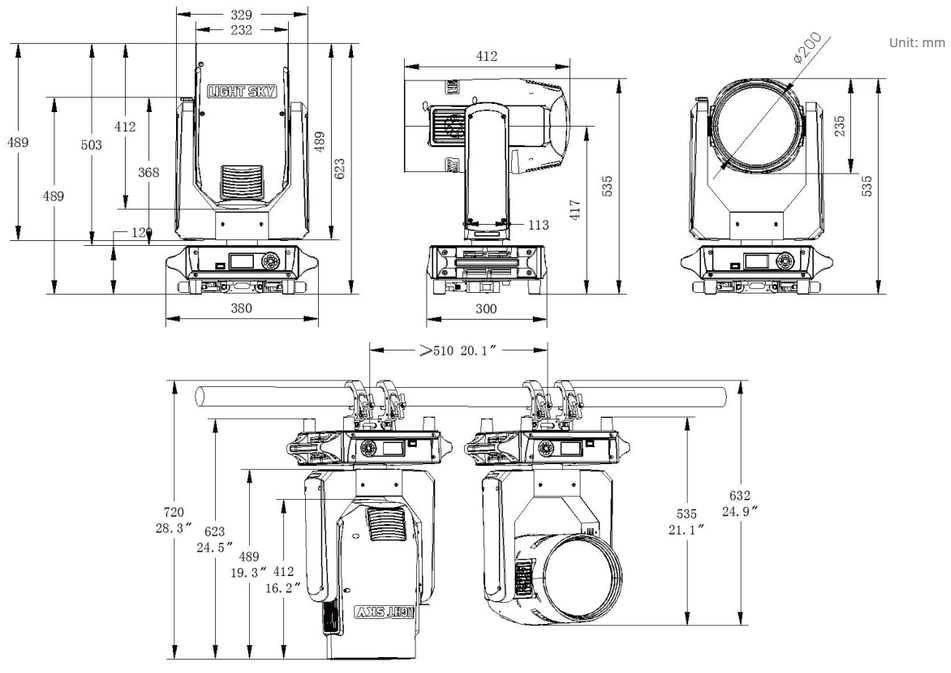

Light source & Optics

- Light source: OSRAM SIRIUS HRI® 480 SL
- Beam angle: 1.6° (ϕ6mm aperture) / 1.2° (ϕ4.5mm aperture) / 0.8° (ϕ3mm aperture), switchable
- Front Lens: ϕ200mm
- Colour Temperature Output: 6500K
- Color Rendering Index: Ra≥80
- Illuminance: 880,000 lx @10m

Color

- 14 color filters + blank, Bidirectional color rainbow, dual-color gradient, color wheel rotation, random modes

GOBO

- 1 Fixed gobo wheel: 17 gobos + blank, with flowing and shaking effects.

Effects

- Prism: 6-Linear Prism + 8 prism + 24 prism + 48 prism , bi-directionally rotatable, independently selectable, and combinable
- Frost effect: Adjustable independent Frost effect
- Focusing: High precision electric focusing
- Strobe: 0.5-12 times / sec adjustable pulse strobe and random strobe
- Dimming: 0-100% linear adjustment

Control and Programming

- Control channels: 14CH, 16CH, 16CH PLUS
- Protocols: DMX512, RDM
- Data connection: 3 pin or 5pin in/out
- Display: LCD screen
- Software upgradeable via USB or DMX interface

Pan/Tilt Movement

- Pan: 540°, 8-bit / 16-bit precision
- Tilt: 270° , 8-bit / 16-bit precision

Power and Electrical

- Input Voltage Range: AC 100-240V 50/60Hz
- Max Power Consumption: 535W
- Power factor: 0.987

Size and Weight

- Product Dimensions: 380mm x 300mm x 623mm
- Net Weight: 22.5 kg
- Carton Dimensions: 450mm x 390mm x 765mm
- Gross Weight: 26.0 kg

Other

- Protection level: IP20
- Operating environment: 0℃ ~ 40℃
- Max surface temperature: 80 ℃
- Max current: 5.35A/110V； 2.68A/220V

Factory Configuration

- Power Cable: 1 pc (Part No.: F0200030002)not required for the PG cable outlet version.
- Signal Cable: 1 pc (Part No.: C1400060031)
- Safety Rope: 2 pcs (Part No.: F0200010008)
- Clamp: 1 pc Compatible with tubes of Ø40-60 mm (Part No.: C0499990047)

Optional Accessories/Packaging

- Flycase Part No.: B0100800001
- Flycase Dimensions(2 in 1): 810mm × 530mm × 845mm
- Flycase Gross Weight(2 in 1): 84.5 kg

Color Wheel



Fixed Gobo Wheel



Function Effect

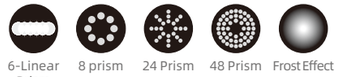

Illumination diagram

